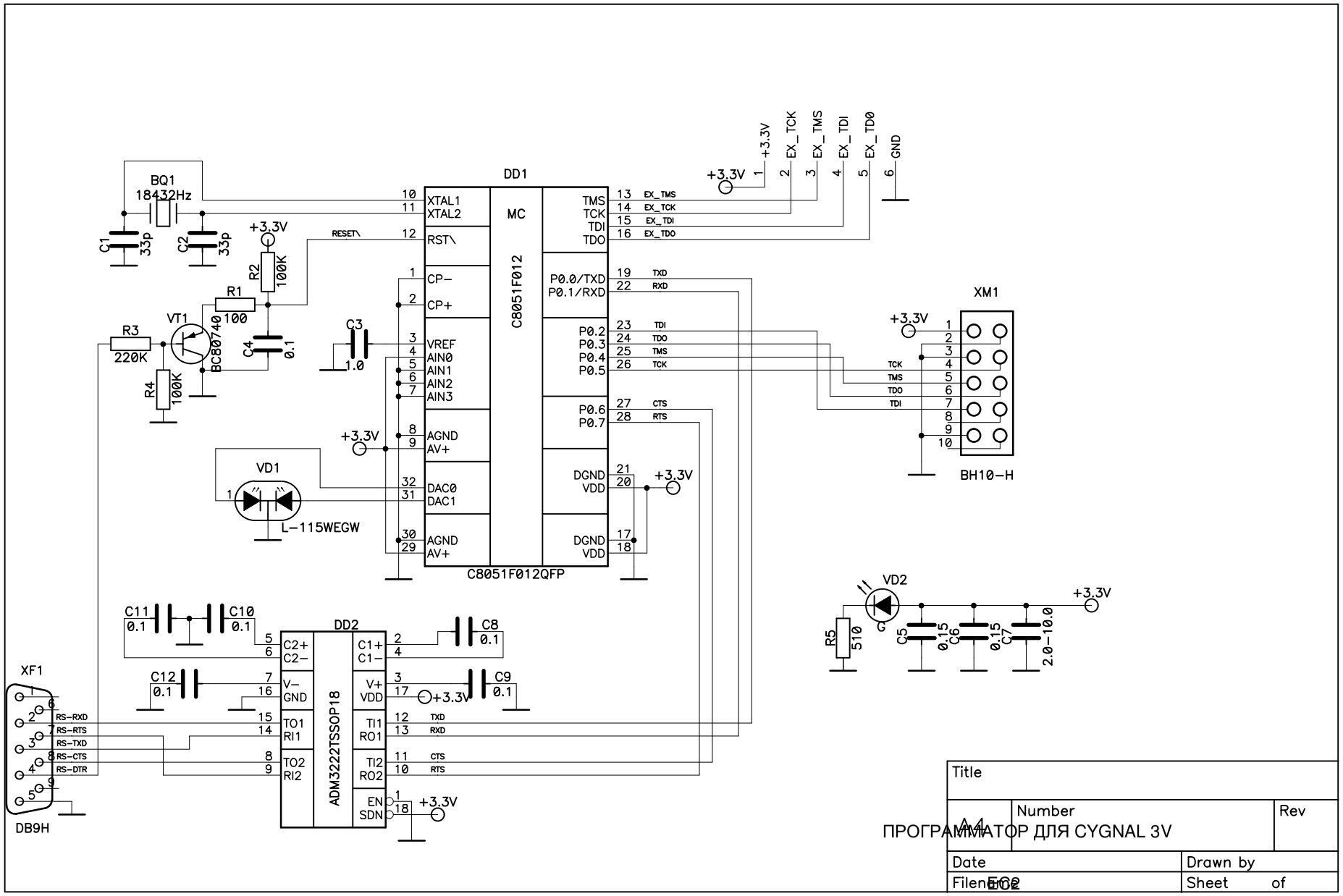

Title		
Number		Rev
Date	Drawn by	
Filename	Sheet of	

ПРОГРАММАТОР ДЛЯ CYGNAL 3V

A4

ЕС2